DIGITAL LOGIC FUNDAMENTALS

Course Code	:30801220
Credit Hours	:3
Prerequisite	: 30801101

Chapter 5

CONVERTING A TRUTH TABLE TO A LOGIC DIAGRAM (CIRCUIT)

Inputs		Output
A	B	L
0	0	0
0	1	1
1	0	1
1	1	0

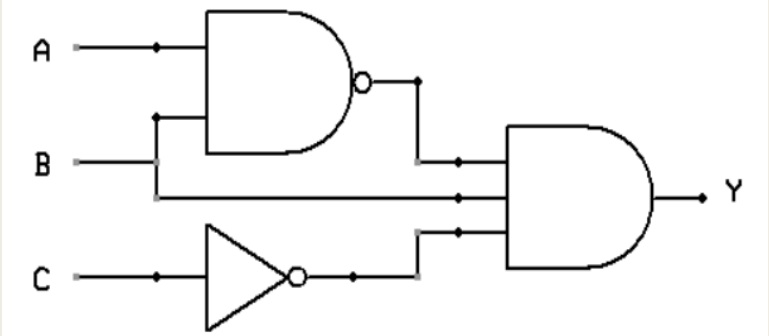

- No direct way: First convert the truth table to a Boolean expression then to a logic diagram.
- Converting truth tables into Boolean expressions two ways:

1. SOP : Sum Of Product
2. POS : Product Of Sum

- These forms can simplify the implementation of logic circuit

- It is easy to convert a function to sum-of-products form using its truth table.
- We are interested in the values of the variables that make the function true (=1).
- Using the truth table, we list the values of the variables that result in a true function value.
- Each group of variables is then ORed together.

$$F(x,y,z) = x\bar{z}+y$$

x	y	z	$x\bar{z}+y$
0	0	0	0
0	0	1	0
0	1	0	1
0	1	1	1
1	0	0	1
1	0	1	0
1	1	0	1
1	1	1	1

- The sum-of-products form for our function is:

$$F(x,y,z) = \bar{x}y\bar{z}+\bar{x}yz+x\bar{y}\bar{z}+xy\bar{z}+xyz$$

We note that this function is not in simplest terms. Our aim is only to rewrite our function in canonical sum-of-products form.

$$F(x,y,z) = x\bar{z}+y$$

x	y	z	$x\bar{z}+y$
0	0	0	0
0	0	1	0
0	1	0	1
0	1	1	1
1	0	0	1
1	0	1	0
1	1	0	1
1	1	1	1

SOP form

- when two or more product terms are summed

Ex:

$$\overline{A}\,\overline{B}\,\overline{C}+AB$$

$$AB\overline{C}+\overline{C}\,\overline{D}$$

$$CD+\overline{E}$$

POS form

- When two or more sum terms are multiplied

Ex:

$$(A+B)(\overline{A}+C)$$

$$(A+B+\overline{C})(B+D)$$

$$(\overline{A}+B)C$$

Sum Of Products method

A	B	C	Y	
0	0	0	0	
0	0	1	0	
0	1	0	1	$\rightarrow \bar{A}B\bar{C}$
0	1	1	0	
1	0	0	0	
1	0	1	0	
1	1	0	0	
1	1	1	1	$\rightarrow ABC$

$$ABC + \bar{A}B\bar{C} = Y$$

Result = 1 Prime variable = 0

Product Of Sums method

A	B	C	Y	
0	0	0	1	
0	0	1	1	
0	1	0	1	
0	1	1	0	$\rightarrow A + \bar{B} + \bar{C}$
1	0	0	0	$\rightarrow \bar{A} + B + C$
1	0	1	1	
1	1	0	1	
1	1	1	1	

$$(A + \bar{B} + \bar{C})(\bar{A} + B + C) = Y$$

Result = 0 Prime variable = 1

MINTERM & MAXTERM

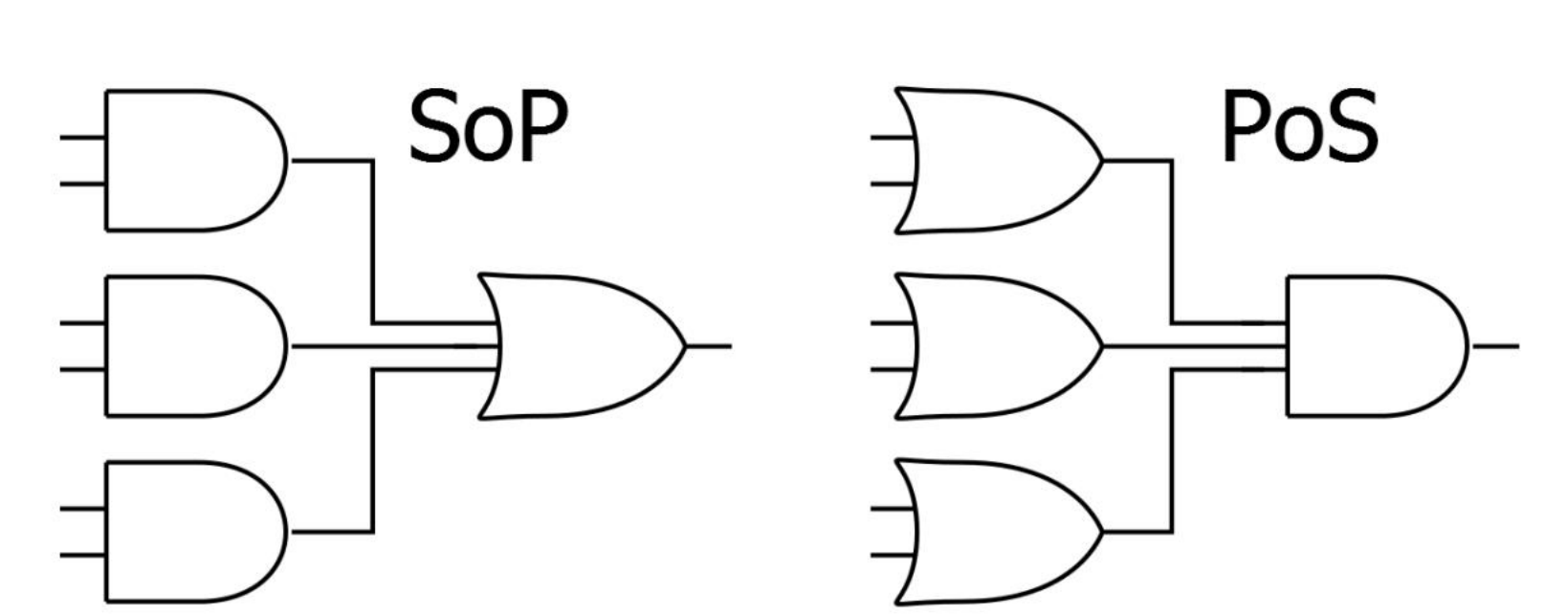

Terminology

- *Literal:* A variable or its complement (Example: x or b').
- *Product term:* literals connected by "•" (Example: a'• b).
- *Sum term:* literals connected by "+" (Example y + z').

Minterm characteristic property

- N variables → 2^n Minterms
- (**Product of literals**) Each Minterm is a product of the corresponding row literals
- The variable is complemented if the corresponding value in the truth table = 0
- And Uncomplemented if the corresponding value in the truth table = 1

Minterm example

Consider the following truth table:

	X	Y	Z
b_0	0	0	0
b_1	0	0	1
b_2	0	1	0
b_3	0	1	1
b_4	1	0	0
b_5	1	0	1
b_6	1	1	0
b_7	1	1	1

For the three variables X, Y, Z there are 2^3 Minterms (products of 3 literals)

$m_0 = X' \cdot Y' \cdot Z'$ $m_1 = X' \cdot Y' \cdot Z$ $m_2 = X' \cdot Y \cdot Z'$ $m_3 = X' \cdot Y \cdot Z$

$m_4 = X \cdot Y' \cdot Z'$ $m_5 = X \cdot Y' \cdot Z$ $m_6 = X \cdot Y \cdot Z'$ $m_7 = X \cdot Y \cdot Z$

Maxterm characteristic property

- N variables → 2^n Maxterms
- (SUM of literals) Each Maxterm is a sum of the corresponding row literals
- The variable is complemented if the corresponding value in the truth table = 1
- And Uncomplemented if the corresponding value in the truth table = 0

Maxterm example

Consider the following truth table:

	X	Y	Z
b_0	0	0	0
b_1	0	0	1
b_2	0	1	0
b_3	0	1	1
b_4	1	0	0
b_5	1	0	1
b_6	1	1	0
b_7	1	1	1

For the three variables X, Y, Z there are 2^3 Maxterms (Sum of 3 literals)

$M_0 = X+Y+Z$ $M_1 = X+Y+Z'$ $M_2 = X+Y'+Z$ $M_3 = X+Y'+Z'$

$M_4 = X'+Y+Z$ $M_5 = X'+Y+Z'$ $M_6 = X'+Y'+Z$ $M_7 = X'+Y'+Z'$

3-Variables Minterm and Maxterm example

Row number	x_1	x_2	x_3	Minterm	Maxterm
0	0	0	0	$m_0 = \bar{x}_1\bar{x}_2\bar{x}_3$	$M_0 = x_1 + x_2 + x_3$
1	0	0	1	$m_1 = \bar{x}_1\bar{x}_2x_3$	$M_1 = x_1 + x_2 + \bar{x}_3$
2	0	1	0	$m_2 = \bar{x}_1x_2\bar{x}_3$	$M_2 = x_1 + \bar{x}_2 + x_3$
3	0	1	1	$m_3 = \bar{x}_1x_2x_3$	$M_3 = x_1 + \bar{x}_2 + \bar{x}_3$
4	1	0	0	$m_4 = x_1\bar{x}_2\bar{x}_3$	$M_4 = \bar{x}_1 + x_2 + x_3$
5	1	0	1	$m_5 = x_1\bar{x}_2x_3$	$M_5 = \bar{x}_1 + x_2 + \bar{x}_3$
6	1	1	0	$m_6 = x_1x_2\bar{x}_3$	$M_6 = \bar{x}_1 + \bar{x}_2 + x_3$
7	1	1	1	$m_7 = x_1x_2x_3$	$M_7 = \bar{x}_1 + \bar{x}_2 + \bar{x}_3$

Truth table to Boolean expression conversion

- Two ways to express the truth table in terms of Boolean expression:

  - SOP→ using Minterm → 1s
  - POS→ Using Maxterm → 0s

Minterm (SOP) Boolean Function

X	Y	Z		F	
0	0	0		0	
0	**0**	**1**		**1**	$m_1 = X'Y'Z$
0	**1**	**0**		**1**	$m_2 = X'YZ'$
0	1	1		0	
1	**0**	**0**		**1**	$m_4 = XY'Z'$
1	0	1		0	
1	**1**	**0**		**1**	$m_6 = XYZ'$
1	1	1		0	

$$F(X,Y,Z) = m_1 + m_2 + m_4 + m_6 = X'Y'Z + X'YZ' + XY'Z' + XYZ'.$$

Maxterm (POS) Boolean Function

X	Y	Z		F	
0	0	0		0	$M_0 = X+Y+Z$
0	0	1		1	
0	1	0		1	
0	1	1		0	$M_3 = X+Y'+Z'$
1	0	0		1	
1	0	1		0	$M_5 = X'+Y+Z'$
1	1	0		1	
1	1	1		0	$M_7 = X'+Y'+Z'$

$$F(X,Y,Z) = M_0 \cdot M_3 \cdot M_5 \cdot M_7 = (X+Y+Z) \cdot (X+Y'+Z') \cdot (X'+Y+Z') \cdot (X'+Y'+Z').$$

Standard Forms:

- **<u>Standard Sum-of-Products (SOP) form:</u>**
  equations are written as an OR of AND terms

- **<u>Standard Product-of-Sums (POS) form:</u>**
  equations are written as an AND of OR terms

Summary

- Minterm
  - A product term which contains each of the *n* variables as factors in either complemented or uncomplemented form is called a *minterm*

Minterm **small letter m**

F = 1

(. .) + (. .) + (. .) terms

0 → ‘ Prime

Exercise 2

Given the function as defined in the truth table below , express F using sum of minterms and product of maxterms

A	B	C	Output
0	0	0	0
0	0	1	1
0	1	0	0
0	1	1	1
1	0	0	0
1	0	1	1
1	1	0	0
1	1	1	0

Homework

F1	A	B	C
1	0	0	0
0	0	0	1
0	0	1	0
1	0	1	1
0	1	0	0
0	1	0	1
1	1	1	0
1	1	1	1

STANDARD FORMS OF BOOLEAN EXPRESSIONS

Standard SOP

Standard POS

Standard Forms

- Sum-of-Products (SOP):

  2 or more product terms are summed by Boolean addition such as

$$AB+A\bar{B}C+A\bar{C}$$

Watch out ! each bar if any must denote on only a single literal (variable) (in brief watch out the NAND), for example

$$AB+\overline{ABC}+AC \text{ is not SOP}$$

Ex# 1: convert (A+B)(C+D) into SOP form

apply distributive law, hence $= AC+AD+BC+BD$

Standard Forms (cont.)

Ex# 2: $\overline{\overline{(A + B)} + C}$

$= \overline{\overline{(A+B)}}\,\overline{C}$ DeMorgan's

$= (A+B)\overline{C}$ Distributive

$= A\overline{C}+B\overline{C}$

Domain is the set of literals (or variables) contained in the Boolean expression !!

Standard Forms (SSOP)

- Standard SOP Form:

  All variables in the domain appear in each product term such as

$$ABC+\bar{A}BC+AB\bar{C}$$

Convert SOP to SSOP

Step 1: Consider domain of SOP

Step 2: Multiply each nonstandard term by

$$(L+\bar{L})$$

Step3 : Repeat step 2 until no nonstandard term left.

SSOP examples

Ex# 1: $AB+A\overline{B}C$ → standard SOP

$= AB(C+\overline{C})+A\overline{B}C = ABC+AB\overline{C}+A\overline{B}C$

Ex# 2: $B+A\overline{B}\overline{C}$

$= B(A+\overline{A})+A\overline{B}\overline{C} = AB+\overline{A}B+A\overline{B}\overline{C}$

$= AB(C+\overline{C})+\overline{A}B(C+\overline{C})+A\overline{B}\overline{C}$

$= ABC+AB\overline{C}+\overline{A}BC+\overline{A}B\overline{C}+A\overline{B}\overline{C}$

SSOP exercise

$$AB + \overline{A}BD + \overline{A}C\overline{D}$$

Solved on paper

Standard Forms (SPOS) + LL’

- **Product-of-Sum (POS):**

2 or more sum terms are multiplied such as $(A+B)(A+\bar{B}+C)$

Watch out the NOR term !!

Add to each non standard form

$+L\cdot\bar{L}$

- **Standard POS:**

all variables in the domain appear in each sum term such as $(A+B+C)(A+\bar{B}+C)$

Ex# 1: $(A+C)(A+B+\bar{C})$

→ standard POS

$= (A+C+B\bar{B})(A+B+\bar{C})$

$=(A+B+C)\ (A+\bar{B}+C)\ (A+B+\bar{C})$

Question: $(A+\bar{C})(A+B)$ → std. POS

Ans: $(A+B+\bar{C})\ (A+\bar{B}+\bar{C})\ (A+B+C)(A+B+\bar{C})$

Std. SOP to std. POS

Example: $A\bar{B}C + \bar{A}BC + A\bar{B}\bar{C} + \bar{A}\bar{B}C + \bar{A}\bar{B}\bar{C}$

101 011 100 001 000

3 variables

$2^3 = 8$ possible combinations

Remained terms: 111, 110, 010

Std. POS $= (\bar{A}+\bar{B}+\bar{C})(\bar{A}+\bar{B}+C)(A+\bar{B}+C)$

SOP → 0 complement POS → 1 complement

Boolean Expressions to Truth Table

SOP → output = 1
POS → output = 0

What u should know: Be able to convert SOP and POS expressions to truth tables and vice versa !!

Convert SOP to truth table

FACT
SSOP is equal to 1 if at least one of the product term is 1.

Step I : construct truth table for all possible inputs.
Step II: convert SOP to SSOP
Step III: Place "1" in the output column that makes the SSOP expression a "1"
Step IV: Place "0" for all the remaining apart from Step III

EX: $\bar{A}\bar{B}\bar{C}+\bar{A}B\bar{C}+A\bar{B}C+AB\bar{C}$

000 010 101 110 →out=1

A	B	C	Out
0	0	0	1
0	0	1	0
0	1	0	1
0	1	1	0
1	0	0	0
1	0	1	1
1	1	0	1
1	1	1	0

Boolean Expressions to Truth Table (cont.)

Convert POS to truth table

FACT
SPOS is equal to 0 if at least one of the sum term is 0.

Step I : construct truth table for all possible inputs.
Step II: convert POS to SPOS
Step III: Place "0" in the output column that makes the SPOS expression a "0"
Step IV: Place "1" for all the remaining apart from Step III

EX: $(\overline{A}+B+C)(A+\overline{B}+C)(A+\overline{B}+\overline{C})$

100 010 011 →out=0

A	B	C	Out
0	0	0	1
0	0	1	1
0	1	0	0
0	1	1	0
1	0	0	0
1	0	1	1
1	1	0	1
1	1	1	1